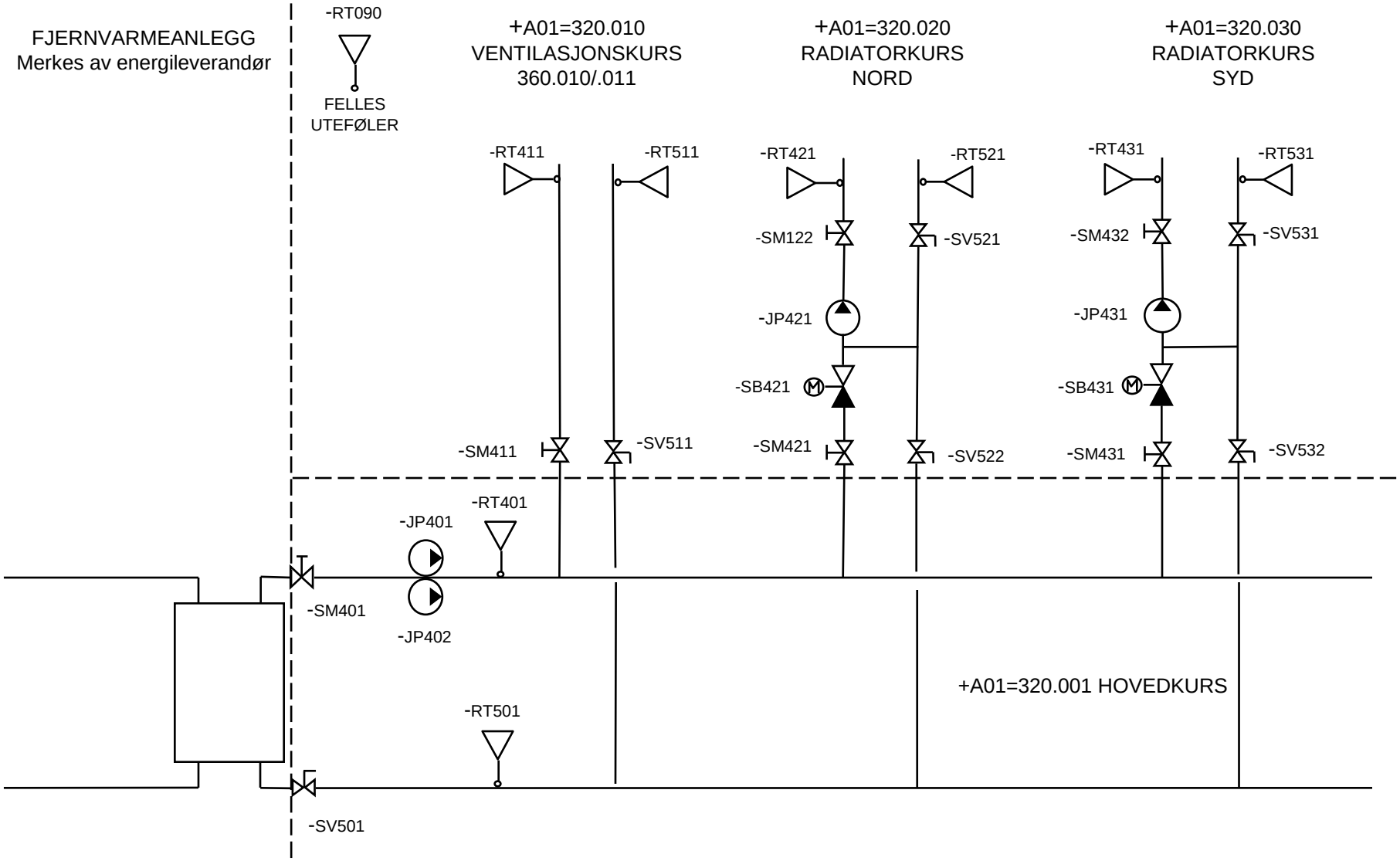# Varmeanlegg +A01=320.001 – .010/.020/.030